NORDMENDE

SMART LIVING

2022 COLLECTION

NORDMENDE
SMART LIVING

There's a name for smart living

We make living as enjoyable and simple as you want.

For over seven decades, NordMende has been helping customers to live the smart life with technologies that are truly ground-breaking and testimony to our commitment, quality and excellence.

Combining great technology with our German engineering heritage, NordMende always looks to deliver the levels of quality and reliability that you've come to expect, at prices that represent real value for money. We know that customers demand appliances that make life easier and that put them firmly in control.

Now imagine all of this coupled with one of the best appliance warranties on the market. Add in cutting edge design and it's clear to see why more and more people are making themselves at home with NordMende.

Contents

07 The Inline Collection
08 Ovens
09 Double Ovens & Microwaves
11 Induction Hobs
12 Gas Hobs
13 Electric Hobs
14 Range Cookers
15 Gas Cooker
16 Electric Cookers
17 Hoods
18 Energy Labels Explained
20 Cooling
26 Laundry
32 Dishwashers
34 Dimensions
41 Customer Service

NORDMENDE

NORDMENDE
SMART LIVING

PyroClean

During the pyrolytic cleaning process, the oven heats up to approximately 450°C for 1 hour, while the door is locked for safety purposes.

At this temperature, residues from roasting, grilling and baking are reduced to a thin layer of ash that can simply be wiped away with a damp cloth.

Easy to Clean (ETC) Enamel

Easy To Clean Enamel is standard for all platforms.

The special formula of Easy To Clean enamel (ETC) prevents dirt sticking to the inner walls thus cleaning is easier.

Catalytic Enamel

Catalytic enamel self-cleans by absorbing fats and oil and burning them to ash, which can then be easily removed from the floor of the oven with a damp cloth.

Oven Functions Explained

Oven Lamp
Allows for the oven cavity to be lit without any heat. Ideal for helping during cleaning to make sure the cavity is as clean and pristine as possible.

De-Frost
Activates the fan only, speeding up the defrosting process while retaining moisture and colour.

Bottom Element Heat
Using an element in the base of the oven, this function is perfect for slow cooking and keeping food warm.

Top Heat
An element in the top of the oven, this function is perfect for browning food

Conventional Oven
Using the top and bottom elements, this is perfect for traditional style cooking. Perfect for baking and pastries.

Bottom Element + Fan
Perfect for baking bread or open top tarts, pies, pastries, etc, this function uses the bottom element and the fan to give the best baking results possible.

Fan Oven
An element in the back of the oven works together with the fan, distributing heat evenly and allowing for perfect cooking on more than one level.

Grill
A grill element in the top of the oven lets you grill small amounts of food perfectly every time.

Conventional Oven + Fan
The conventional oven and the fan work together, allowing for traditional style cooking with even heat distribution from the fan.

Double Grill
For occassions when you need to grill more food, this function activates the full grill element surface for perfect results with larger quantities.

Double Grill + Fan
The double grill with the fan allows for the best results when finishing larger roasts or grilling meats.

Grill + Fan
The grill plus the fan work together to evenly distribute heat. Perfect for browning and finishing small roasts.

Pizza Oven
No matter what style pizza you like, this function uses the bottom element together with the fan and element to deliver perfect pizzas everytime.

3D Heat
Using all elements with the fan, this is the perfect setting for multilevel cooking or baking.

NORDMENDE

SMART LIVING

THE INLINE COLLECTION

Multifunction Single Oven

- Multifunction Oven
- 70 Litre Capacity
- Pyrolytic Cleaning
- 9 Programmes
- Digital Clock
- Pop-Out Rotary Knobs & Push Button Control
- Black Glass & Stainless Steel
- A Energy Rating
- 3 Year Warranty

SOP525IX (Pyrolytic)

Multifunction Single Oven

- Multifunction Oven
- 70 Litre Capacity
- Catalytic Cleaning
- 9 Programmes
- Digital Clock
- Pop-Out Rotary Knobs & Push Button Control
- Black Glass & Stainless Steel
- A Energy Rating
- 3 Year Warranty

SOC525IX (Catalytic)

45cm Combi Microwave Oven

- 44 Litre Capacity
- 900w Microwave
- 5 Microwave Power Levels
- Grill & Fan Oven
- 6 Combi Cooking Settings
- 13 Auto Programmes
- Defrost Functions
- Child Lock
- 3 Year Warranty

NM525IX

14cm High Warming Drawer

- 22 Litre Capacity
- Bread/Dough Proofing
- Slow Cook Function
- Yoghurt Preparation
- 40°- 80°C Temperature Range
- Defrost & Soften Food
- Max Capacity: 25kg
- Black Glass & Stainless Steel
- 3 Year Warranty

WD525IX / WD515IX

- Multifunction Oven
- 65 Litre Capacity
- Pyrolytic Cleaning
- 8 Programmes
- Closed Door Grilling
- Digital Clock
- Quadruple Glazed Door
- Black Glass & Stainless Steel
- A Energy Rating
- 3 Year Warranty

SOP416IX

- Multifunction Oven
- 78 Litre Capacity
- Catalytic Liners
- 9 Programmes
- Closed Door Grilling
- Digital Clock
- Double Glazed Door
- Black Glass & Stainless Steel
- A Energy Rating
- 3 Year Warranty

SOC316IX

- Multifunction Oven
- 78 Litre Capacity
- Catalytic Liners
- 9 Programmes
- Closed Door Grilling
- Digital Clock
- Double Glazed Door
- Black Glass
- A Energy Rating
- 3 Year Warranty

SOC315BL

- Fan Oven with Grill
- 65 Litre Capacity
- Easy to Clean Enamel
- 4 Programmes
- Closed Door Grilling
- Mechanical Timer
- Double Glazed Door
- Stainless Steel or Black Glass
- A Energy Rating
- 3 Year Warranty

SO206IX/BL

- Fan Oven with Grill
- 65 Litre Capacity
- Easy to Clean Enamel
- 4 Programmes
- Closed Door Grilling
- Double Glazed Door
- Stainless Steel or Black Glass
- A Energy Rating
- 3 Year Warranty

SO106IX/BL

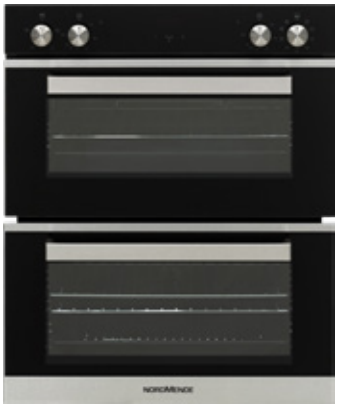

- Undercounter Double Oven
- Multifunction Main Oven
- Multifunction Top Oven
- 50 Litre Main Oven Capacity
- 39 Litre Top Oven Capacity
- Left & Right Catalytic Liners
- Digital Clock & Timer
- Black Glass & Stainless Steel
- A Energy Rating
- 3 Year Warranty

DOUC425IX

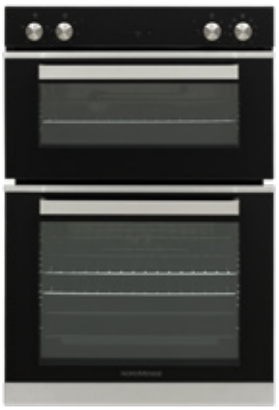

- Built In Double Oven
- Multifunction Main Oven
- Multifunction Top Oven
- 78 Litre Main Oven Capacity
- 39 Litre Top Oven Capacity
- Left & Right Catalytic Liners
- Digital Clock & Timer
- Black Glass & Stainless Steel
- A Energy Rating
- 3 Year Warranty

DOIC425IX

- Built In Double Oven
- Fan Main Oven
- Conventional Top Oven & Grill
- 78 Litre Main Oven Capacity
- 39 Litre Top Oven Capacity
- Digital Clock & Timer
- Black Glass & Stainless Steel
- A Energy Rating
- 3 Year Warranty

DOI325IX

- 25 Litre Built In Microwave
- 900w Microwave / 1000w Grill
- Auto-Door Opening
- 31.5cm Turntable
- 8 Auto Programmes
- Defrost by Weight or Time
- Touch Control
- Digital Clock
- Black Glass & Stainless Steel
- 1 Year Warranty

NM25IX

- 20 Litre Built In Microwave
- 800w Microwave / 1000w Grill
- Auto-Door Opening
- 25.5cm Turntable
- 8 Auto Programmes
- Defrost by Weight or Time
- Touch Control
- Digital Clock
- Black Glass & Stainless Steel
- 1 Year Warranty

NM20IX

- 20 Litre Built In Microwave
- 800w Microwave / 1000W Grill
- 24cm Turntable
- 8 Auto Programmes
- Defrost by Weight or Time
- Child Lock
- Digital Clock
- Stainless Steel
- 1 Year Warranty

NM825BIX

- 20 Litre Built In Microwave
- 800w Microwave / 1000W Grill
- 24cm Turntable
- 8 Auto Programmes
- Defrost by Weight or Time
- Child Lock
- Digital Clock
- Black
- 1 Year Warranty

NM824BBL

Hob Functions Explained

Auto Off
The hob will automatically shut off if left idle for a period of time (1.5 to 6 hours depending on the power level).

Boost Function
Increases the power to an individual zone to provide rapid heating to that zone. Great for bringing a pot of water to a rapid boil.

Bridge Zone
This function locks 2 zones together to act as a single zone. Fantastic when you want to use large pots pans or heat a roasting tray.

Child Lock
Locks the hob controls to ensure the hob cannot be activated by small & curious hands.

Timer
Allows you to set a timer for individual or combined zones to ensure perfect cooking times when needed.

Touch Surface
Easy to use touch controls offer more flexibility and a cleaner look than traditional knob controls.

Hot Surface Indicator
For added safety, an indicator will display for each zone after cooking highlighting when the zone is still hot.

Safety Function
For induction hobs, a thermal cut off system activates if the hob detects it is overheating. In gas hobs, a flame failure device will shut off the gas if the flame goes out.

Slider Touch
Slider controls offer even greater flexibility and allows power levels to be set easier than standard touch controls.

Pause Function
This function will pause all the cooking in all zones and restart it from the same power levels when pressed again. Paused zones will remain warm.

Plug & Play
For easier installation, you can set the maximum power of the hob if needed, allowing a standard plug to be used if required.

Pot Detection
The hob will wait until it detects the correct type or size of pot or pan before activating a zone. Otherwise, the hob will switch off automatically after 2 minutes.

- 90cm Induction Hob
- 5 Zones & 2 Bridge Zones
- Slider Control
- Residual Heat Indicators
- Automatic Pot Detection
- Frameless Design
- Boost Function on all Zones
- Electronic Timer
- Child Lock
- 3 Year Warranty

HCI901FL

- 78cm Induction Hob
- 4 Zones
- Touch Control
- Residual Heat Indicators
- Automatic Pot Detection
- Frameless Design
- Bevelled Front Edge
- Smart Pause
- Child Lock
- 3 Year Warranty

HCI781FL

- 60cm Induction Hob
- 4 Zones
- Touch Control
- Residual Heat Indicators
- Automatic Pot Detection
- Frameless Design
- Bevelled Front Edge
- Smart Pause
- Child Lock
- 3 Year Warranty

HCI62FL

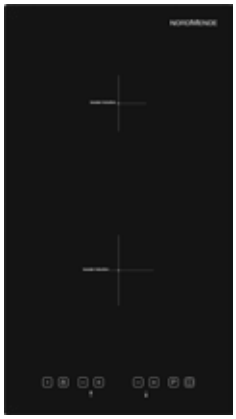

- 30cm Domino Induction Hob
- 2 Zones
- Touch Control
- Residual Heat Indicators
- Automatic Pot Detection
- Frameless Design
- Smart Pause
- Child Lock
- 3 Year Warranty

HCI30FL

Image shows HCI901FL

- 90cm Gas Hob
- 5 Burners incl. Side Wok Burner
- Cast Iron Pan Supports
- Flame Failure Safety Device
- Stainless Steel Controls
- Auto Ignition
- Gas Conversion Kit
- Black Glass
- 3 Year Warranty

HGX904BGL

- 70cm Gas Hob
- 5 Burners incl. Central Wok Burner
- Cast Iron Pan Supports
- Flame Failure Safety Device
- Stainless Steel Controls
- Auto Ignition
- Gas Conversion Kit
- Black Glass
- 3 Year Warranty

HGX703BGL

- 70cm Gas Hob
- 5 Burners incl. Central Wok Burner
- Cast Iron Pan Supports
- Flame Failure Safety Device
- Stainless Steel Controls
- Auto Ignition
- Gas Conversion Kit
- Stainless Steel
- 3 Year Warranty

HGX703IX

- 60cm Gas Hob
- 4 Burners
- Cast Iron Pan Supports
- Flame Failure Safety Device
- Stainless Steel Controls
- Auto Ignition
- Gas Conversion Kit
- Black Glass
- 3 Year Warranty

HGX603BGL

- 60cm Gas Hob
- 4 Burners
- Cast Iron Pan Supports
- Flame Failure Safety Device
- Stainless Steel Controls
- Auto Ignition
- Gas Conversion Kit
- Stainless Steel
- 3 Year Warranty

HGX603IX

- 60cm Gas Hob
- 4 Burners
- Enamel Pan Supports
- Flame Failure Safety Device
- Stainless Steel Controls
- Auto Ignition
- Gas Conversion Kit
- Black Glass or Stainless Steel
- 3 Year Warranty

HGE603BL/IX

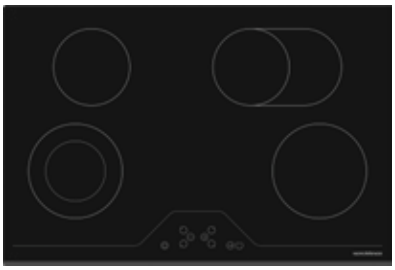

- 78cm Electric Hob
- 4 Cooking Zones
- 1 Dual Zone & 1 Extendable Zone
- Residual Heat Indicators
- Front Touch Controls
- Front Bevelled Edge
- Child Lock
- Highlight Element
- Black Glass
- 3 Year Warranty

HCT781FL

- 60cm Electric Hob
- 4 Cooking Zones
- Residual Heat Indicators
- Front Touch Controls
- Front Bevelled Edge
- Child Lock
- Highlight Element
- Black Glass
- 3 Year Warranty

HCT62FL

- 30cm Electric Domino Hob
- 2 Cooking Zones
- Residual Heat Indicators
- Front Touch Controls
- Front Bevelled Edge
- Child Lock
- Highlight Element
- Plug & Play
- Black Glass
- 3 Year Warranty

HTC30

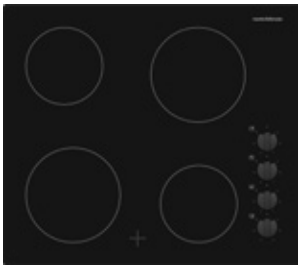

- 60cm Electric Hob
- 4 Cooking Zones
- Residual Heat Indicators
- Stainless Steel Knob Controls
- Front Bevelled Edge
- Highlight Element
- Black Glass
- 3 Year Warranty

HCP604FL

- 60cm Electric Hob
- 4 Cooking Zones
- Power On/Off Indicator
- Stainless Steel Knob Controls
- Front Bevelled Edge
- Highlight Element
- Stainless Steel
- 3 Year Warranty

HE62IX

- 60cm Electric Hob
- 4 Cooking Zones
- Power On/Off Indicator
- Stainless Steel Knob Controls
- Front Bevelled Edge
- Highlight Element
- Black
- 3 Year Warranty

HE62BL

- 100cm Range Cooker
- Multifunction Oven
- Fan Oven
- Double Grill
- Storage Drawer
- 6 Regular Gas Burners
- 1 Wok Burner
- Double Glazed Oven Doors
- Easy Clean Enamel Cavity
- A Energy Rating
- 3 Year Warranty

CSG100IX

The NordMende range cooker's cast iron supports are designed to be robust and durable.
They position the pan at optimum height above the flame ensuring the even distribution of heat while cooking. Giving you perfect cooking results!

CAST IRON SUPPORTS

- 90cm Range Cooker
- Multifunction Oven
- Fan Oven
- Double Grill
- Storage Drawer
- 5 Regular Gas Burners
- 1 Wok Burner
- Double Glazed Oven Doors
- Easy Clean Enamel Cavity
- A Energy Rating
- 3 Year Warranty

CSG92IX

- 60 cm Natural Gas Cooker
- Main Oven Capacity: 62 Litres
- Top Cavity Capacity: 33 Litres
- 4 Gas Burners
- Grill in Top
- Enamel Pan Supports
- Easy to Clean Enamel
- Grill Pan and Handle
- Black
- 3 Year Warranty

CTG61BK

- 60 cm LPG Gas Cooker
- Main Oven Capacity: 62 Litres
- Top Cavity Capacity: 33 Litres
- 4 Gas Burners
- Grill in Top
- Enamel Pan Supports
- Easy to Clean Enamel
- Grill Pan and Handle
- White or Black
- 3 Year Warranty

CTG61LPGWH/BK

- 50 cm LPG Gas Cooker
- Main Oven Capacity: 53 Litres
- Top Cavity Capacity: 29 Litres
- 4 Gas Burners
- Grill in Top
- Enamel Pan Supports
- Easy to Clean Enamel
- Grill Pan and Handle
- White or Black
- 3 Year Warranty

CTG51LPGBK/WH

- 50 cm Natural Gas Cooker
- Main Oven Capacity: 53 Litres
- Top Cavity Capacity: 29 Litres
- 4 Gas Burners
- Grill in Top
- Enamel Pan Supports
- Easy to Clean Enamel
- Grill Pan and Handle
- White
- 3 Year Warranty

CTG51WH

- 50 cm LPG Gas Cooker
- Oven Capacity: 50 Litres
- 4 Gas Burners
- Grill in Top
- Enamel Pan Supports
- Easy to Clean Enamel
- Grill Pan and Handle
- White
- 3 Year Warranty

CSG52LPGWH

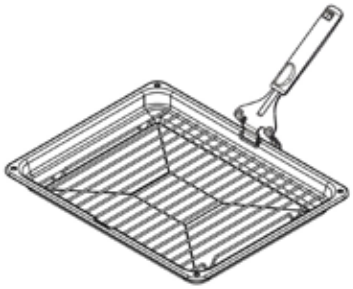

All of our freestanding cookers come with a grill pan and handle, perfect to use for your Sunday morning family breakfast!

- 60cm Electric Cooker
- Fan in Main Oven
- Grill Only in Top Cavity
- Main Oven Capacity: 58 Litres
- Top Cavity Capacity: 35 Litres
- Ceramic Hob - 4 Zones
- Residual Heat Indicators
- Easy to Clean Enamel
- White or Black
- 3 Year Warranty

CTEC61WH/BK

- 60cm Electric Cooker
- Fan in Main Oven
- Grill Only in Top Cavity
- Main Oven Capacity: 63 Litres
- Top Cavity Capacity: 36 Litres
- Ceramic Hob - 4 Zones
- Residual Heat Indicators
- Easy to Clean Enamel
- Stainless Steel
- 3 Year Warranty

CDEC61IX

- 60cm Electric Cooker
- Single Cavity
- Fan Oven & Grill
- Oven Capacity: 55 Litres
- Ceramic Hob - 4 Zones
- Residual Heat Indicators
- Easy to Clean Enamel
- White
- 3 Year Warranty

CSE63WH

You can set the desired cooking time by simply turning the timer button clockwise.

At the end of the time period, the cooker will beep to let you know.

- 50cm Electric Cooker
- Conventional Main Oven
- Grill Only in Top Cavity
- Main Oven Capacity: 50 Litres
- Top Cavity Capacity: 31 Litres
- Ceramic Hob - 4 Zones
- Residual Heat Indicators
- Easy to Clean Enamel
- White or Black
- 3 Year Warranty

CTEC51BK/WH

- 50cm Electric Cooker
- Single Cavity
- Conventional Oven & Grill
- Oven Capacity: 55 Litres
- Ceramic Hob - 4 Zones
- Residual Heat Indicators
- Easy to Clean Enamel
- White
- 3 Year Warranty

CSE514WH

- 90cm/60cm Curved Glass Hood
- Stainless Steel & Glass
- Max Extraction: 420 m^3/h
- 3 Speed Push Button Control
- Max Noise: 68 dBa
- Cassette Grease Filter
- 2x LED Lamps
- 150mm Ducting
- C Energy Class
- 3 Year Warranty

CHGLS905IX / CHGLS605IX

- 60cm Box Design Hood
- Stainless Steel
- Max Extraction: 435 m^3/h
- 3 Speed Push Button Control
- Max Noise: 68 dBa
- Cassette Grease Filter
- 2x LED Lamps
- 150mm Ducting
- C Energy Class
- 3 Year Warranty

CHBD604IX

- 60cm Chimney Hood
- Stainless Steel
- Max Extraction: 430 m^3/h
- 3 Speed Push Button Control
- Max Noise: 67 dBa
- Cassette Grease Filter
- 2x LED Lamps
- 150mm Ducting
- D Energy Class
- 3 Year Warranty

CHCMY604IX

- 60cm Telescopic Hood
- Silver
- Max Extraction: 310 m^3/h
- 3 Speed Push Button Control
- Max Noise: 67 dBa
- Cassette Grease Filter
- 2x LED Lamps
- 150mm Ducting
- D Energy Class
- 3 Year Warranty

CHTEL60

- 60cm Integrated Hood
- Single Motor Max Extr: 240 m^3/h
- Twin Motor Max Extr: 400 m^3/h
- 3 Speed Slider Control
- Max Noise: 61 / 66 dBa
- Synthetic Grease Filter
- 2x LED Lamps
- 125mm Ducting
- C Energy Class
- 3 Year Warranty

CHINTTWIN/SINGLE60

- 60cm Canopy Hood
- Single Motor Max Extr: 300 m^3/h
- 3 Speed Slider Control
- Max Noise: 67 / 71 dBa
- Synthetic Grease Filter
- 2x LED Lamps
- 125mm Ducting
- D Energy Class
- 3 Year Warranty

CHCANSINGLE602

Energy Labels Explained

You may have noticed that energy labels for some home appliances have recently changed to a new look & design. This is due to the technological advancements manufacturers, such as NordMende, have made in home appliances over the past number of years. New, innovative ways to reduce the energy consumption of appliances have been developed, making them easier to use and more environmentally friendly
However, advancements have been so great that many appliances now fall outside the old energy rating scale with many appliances going above the A+++ limit.
In order to assist with consumer decision making, a new label and new measuring methods have been developed. The old D to A+++ rating scale has been redesigned to a new G to A scale, effectively "moving the goal posts" to allow for an easier to read label.
It's important to note that new appliances have not become less efficient, in fact most new appliances are even more efficient than before, but the rating and measuring methods have changed to become more relevant, easier to compare and to assist in deciding which appliances best suit your needs.
As of 1st March 2021 all dishwashers, washing machines, washer dryers & cooling appliances now carry this new label, with tumble dryers and cooking appliances following in 2022.

Old EU Energy Label

New EU Energy Label

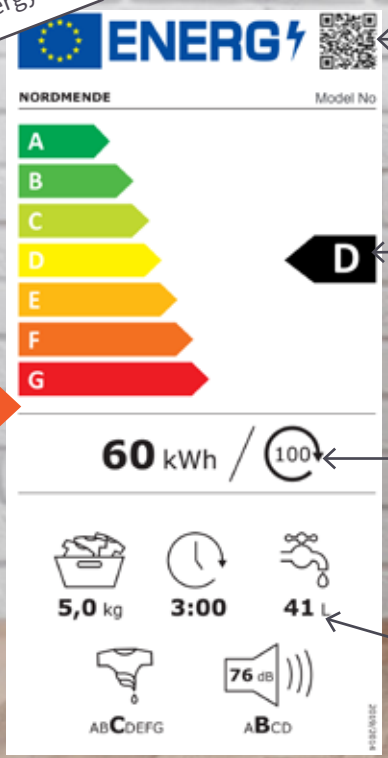

New QR Codes
Scan with your smartphone for added energy information

New Easier to Read Rating Scale

New Energy Consumption Guide
kWh/100 operating cycles for washing machines (using Eco 40-60 programme)
kWh/annum for cooling appliances (using new standard conditions)
kWh/100 operating cycles for dishwashers (using Eco programme)

New Appliance Information (rated per operating cycle)
Cooling appliances will show volume and noise levels here (rated in dB(A) re 1 pW plus noise emission class)

NORDMENDE

- 186cm Larder Fridge
- 390 Litre Capacity
- Auto Defrost
- Safety Glass Shelves
- Electronic Control Front Display
- Reversible Door
- 41dBa Max Noise Level
- White or Stainless Steel
- F Energy Rating
- 3 Year Warranty

RTL398RIX/RTL399WH

- 186cm No Frost Larder Freezer
- 311 Litre Capacity
- 4* Freezer Performance
- Electronic Control Front Display
- Reversible Door
- Freeze Protection up to -15°C
- 41dBa Max Noise Level
- Stainless Steel or White
- F Energy Rating
- 3 Year Warranty

RTF394NFRIX/WH

- 144cm Larder Fridge
- 255 Litre Capacity
- Auto Defrost Fridge
- Safety Glass Shelves
- Reversible Door
- 3 Door Shelves
- Mechanical Control System
- 41dBa Max Noise Level
- F Energy Rating
- 3 Year Warranty

RTL268WH

- 145cm Larder Freezer
- 288 Litres Capacity
- 4* Freezer Performance
- Electronic Control System
- Quick Freeze Compartments
- Reversible Door
- Freeze Protection up to -15°C
- 40dBa Max Noise Level
- F Energy Rating
- 3 Year Warranty

RTF248WH

- 175cm Retro Fridge Freezer
- Net Fridge Capacity: 242 Litres
- Net Freezer Capacity: 70 Litres
- Two Doors (Not Reversible)
- Auto Defrost Fridge
- Top Mount Freezer
- 40 dBa Max Noise Level
- Gloss Cream
- F Energy Rating
- 3 Year Warranty

RET350C

- 190cm Retro Fridge Freezer
- Net Fridge Capacity: 231 Litres
- Net Freezer Capacity: 87 Litres
- Two Doors (Not Reversible)
- Auto Defrost Fridge
- No Frost Freezer
- 45 dBa Max Noise Level
- Gloss Cream
- F Energy Rating
- 3 Year Warranty

RETNF371C

- 186cm x 60cm Fridge Freezer
- Net Fridge Capacity: 230 Litres
- Net Freezer Capacity: 101 Litres
- No Frost Freezer
- Reversible Doors
- Chrome Recessed Handle
- 42 dBa Max Noise Level
- Dark Inox
- F Energy Rating
- 3 Year Warranty

RFF371NFDIX

- 186cm x 60cm Fridge Freezer
- Net Fridge Capacity: 234 Litres
- Net Freezer Capacity: 107 Litres
- Auto Defrost Fridge
- Low Frost Freezer
- Reversible Doors
- 39 dBa Max Noise Level
- White, Silver or Dark Inox
- F Energy Rating
- 3 Year Warranty

RFF334WH/SL/DIX

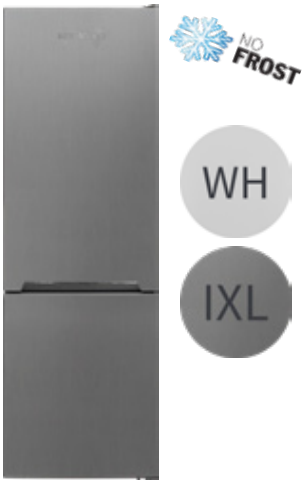

- 166cm x 55cm Fridge Freezer
- Net Fridge Capacity: 142 Litres
- Net Freezer Capacity: 98 Litres
- No Frost Freezer
- Reversible Doors
- 42 dBa Max Noise Level
- Inox Look or White
- F Energy Rating
- 3 Year Warranty

RFF316NFWH/IXL

- 170cm x 55cm Fridge Freezer
- Net Fridge Capacity: 184 Litres
- Net Freezer Capacity: 84 Litres
- Auto Defrost Fridge
- Low Frost Freezer
- Reversible Doors
- 40 dBa Max Noise Level
- Inox Look, White, Black or Silver
- F Energy Rating
- 3 Year Warranty

RFF60404BL/WH/SL/IXL

- 144cm x 55cm Fridge Freezer
- Net Fridge Capacity: 171 Litres
- Net Freezer Capacity: 42 Litres
- Auto Defrost Fridge
- Low Frost Freezer
- Reversible Doors
- 41 dBa Max Noise Level
- Silver
- F Energy Rating
- 3 Year Warranty

RFF265SL

- 144cm x 55cm Fridge Freezer
- Net Fridge Capacity: 171 Litres
- Net Freezer Capacity: 42 Litres
- Auto Defrost Fridge
- Low Frost Freezer
- Reversible Doors
- 41 dBa Max Noise Level
- White
- F Energy Rating
- 3 Year Warranty

RFF265WH

- 55cm Undercounter Fridge
- 135 Litre Capacity
- Auto Defrost Fridge
- Safety Glass Shelves
- Reversible Door
- Recessed Handles
- 41 dBa Max Noise Level
- White
- F Energy Rating
- 3 Year Warranty

RUL154WH

- 55cm U/C Fridge with Icebox
- 105 Litre Fridge Capacity
- 12 Litre 4* Freezer Box Capacity
- Auto Defrost Fridge
- Safety Glass Shelves
- Reversible Door
- Recessed Handles
- 40 dBa Max Noise Level
- F Energy Rating
- 3 Year Warranty

RUI144WH

- 55cm Undercounter Freezer
- 103 Litre Capacity
- Quick Freeze Compartments
- Opaque Freezer Drawers
- Reversible Door
- Recessed Handles
- 40dBa Max Noise Level
- White
- F Energy Rating
- 3 Year Warranty

RUF149WH

- 50cm Undercounter Fridge
- 90 Litre Capacity
- Auto Defrost Fridge
- Safety Glass Shelves
- Reversible Door
- Recessed Handles
- 41 dBa Max Noise Level
- White
- F Energy Rating
- 3 Year Warranty

RUL123NMWH

- 50cm U/C Fridge with Icebox
- 74 Litre Fridge Capacity
- 8 Litre 2* Freezer Box Capacity
- Auto Defrost Fridge
- Safety Glass Shelves
- Reversible Door
- Recessed Handles
- 41 dBa Max Noise Level
- F Energy Rating
- 3 Year Warranty

RUI113NMWH

- 50cm Undercounter Freezer
- 63 Litre Capacity
- Quick Freeze Compartments
- Opaque Freezer Drawers
- Reversible Door
- Recessed Handles
- Mechanical Temperature Setting
- 41 dBa Max Noise Level
- F Energy Rating
- 3 Year Warranty

RUF118NMWH

NO FROST

By using dry and cool air in the fridge & freezer compartments, NordMende No Frost fridges and freezers prevent humidity and frost build up, resulting in:

- No need for manual defrost
- Better temperature control
- Reduces odours
- Better food packing

- 177cm Integrated Larder Fridge
- 294 Litre Capacity
- Auto Defrost Fridge
- Turbo Fan Air Cooling
- Humidity Controller
- Safety Glass Shelves
- Reversible Door
- Sliding Hinge
- F Energy Rating
- 3 Year Warranty

RITL398

- 177cm Integrated Larder Freezer
- 197 Litre Capacity
- No Frost Freezer
- 4* Freezer Performance
- 6 Compartments + 2 Flap
- LED Lighting
- Reversible Door
- Sliding Hinge
- F Energy Rating
- 3 Year Warranty

RITF394ANF

- 122cm Integrated Larder Freezer
- 200 Litre Capacity
- Auto Defrost Fridge
- Reversible Door
- Sliding Hinge
- Safety Glass Shelves
- Mechanical Temperature Control
- 38 dBa Max Noise Level
- F Energy Rating
- 3 Year Warranty

RIL1233

Not Suitable for Undercounter Installation

- 88cm Integrated Fridge
- 106 Litre Fridge Capacity
- 17 Litre 4* Freezer Box Capacity
- Auto Defrost Fridge
- Reversible Door
- Sliding Hinge
- Mechanical Temperature Control
- 41 dBa Max Noise Level
- F Energy Rating
- 3 Year Warranty

RII880A+

- 177cm 70:30 Fridge Freezer
- 180 Litre Fridge Capacity
- 63 Litre Freezer Capacity
- Frost Free
- Wine Rack Included
- Safety Glass Shelves
- Reversible Doors
- Sliding Hinge
- F Energy Rating
- 3 Year Warranty

RIFF70303NF

- 177cm 50:50 Fridge Freezer
- 145 Litre Fridge Capacity
- 85 Litre Freezer Capacity
- Frost Free
- Wine Rack Included
- Safety Glass Shelves
- Reversible Doors
- Sliding Hinge
- F Energy Rating
- 3 Year Warranty

RIFF50503NF

- 177cm 70:30 Fridge Freezer
- 181 Litre Fridge Capacity
- 68 Litre Freezer Capacity
- Wine Rack Included
- Safety Glass Shelves
- Reversible Doors
- Sliding Hinge
- F Energy Rating
- 3 Year Warranty

RIFF70303NM

- 177cm 50:50 Fridge Freezer
- 146 Litre Fridge Capacity
- 94 Litre Freezer Capacity
- Wine Rack Included
- Safety Glass Shelves
- Reversible Doors
- Sliding Hinge
- F Energy Rating
- 3 Year Warranty

RIFF50504NM

- 60cm Dual Zone Wine Cooler
- Freestanding or Built In
- 135 Litre Net Capacity
- Recommended Bottles: 46
- 5-22°C Temperature Range
- Suitable for Red & White Wine
- Reversible Door
- G Energy
- Stainless Steel Edge
- 3 Year Warranty

WC46IX

- 30cm Dual Zone Wine Cooler
- Freestanding or Built In
- 55 Litre Net Capacity
- Recommended Bottles: 17
- 5-22°C Temperature Range
- Suitable for Red & White Wine
- Reversible Door
- G Energy
- Stainless Steel Edge
- 3 Year Warranty

WC17IX

Image shows WC46IX

- Undercounter Larder Fridge
- 134 Litre Capacity
- Auto Defrost Fridge
- Reversible Door
- Fixed Hinge
- Safety Glass Shelves
- Mechanical Temperature Control
- 39 dBa Max Noise Level
- F Energy Rating
- 3 Year Warranty

RIUL142INM

- Undercounter Larder Fridge
- 98 Litre Fridge Capacity
- 17 Litre 4* Freezer Box Capacity
- Auto Defrost Fridge
- Mechanical Temperature Control
- Reversible Door
- Fixed Hinge
- 39 dBa Max Noise Level
- F Energy Rating
- 3 Year Warranty

RIUI162NM

- Undercounter Larder Freezer
- 96 Litre Capacity
- 4* Rated Freezer
- Reversible Door
- Fixed Hinge
- 3 Freezer Compartments
- Mechanical Temperature Control
- 39 dBa Max Noise Level
- F Energy Rating
- 3 Year Warranty

RIUF102NM

Washing Machine Features & Programmes Explained

Unbalance Control System
In the case of unevenly distributed laundry, this system redistributes the load inside the drum and adjusts the spin speed to achieve the optimum spinning efficiency.

Boomerang Cabinet
These side panels are designed to strengthen and increase rigidity and stability, and to decrease the vibration level.

Overflow & Foam Protection
This system detects potential problems with the water supply, which may result in overflowing. If a problem is detected, the drain pump is automatically turned on.

Stainless Steel Pearl Drum
The new pearl drum pattern provides greater protection to gently wash clothes.

Eco-Logic System (Half-Load)
When the washing machine is half-loaded it will detect this & automatically decrease the energy consumption by up to 50%, and dramatically decrease the programme durations.

Spin Reduction & No Spin
Optional spinning speed reduction by 400RPM and no spin option. A lower spin speed reduces creases and is used for delicate clothes.

Delay Timer
This enables the user to postpone the starting time of the washing process from 1-23 hours.

Child Lock
Child lock prevents any unauthorised changes on the control panel settings while the washing machine is in operation.

Adjustable Temperature
Adjust the temperature from 20°C - 90°C to adapt to the needs of the fabric and how soiled the fabric is.

Allergy Safe
NordMende Washing Machines are effective for allergenes and bacteria types when the "Allergy Safe" programme is selected

Allergenes	Bacterias	Fungus	Fungus
Pollen	Dust	Escherichia coli	Cladosporium
Cat	House dust mite	Entercoccus faecilis	Cladosporioides
Dog	Living house dust mite	Staphylococcus aureus	

Eco 40-60
This is used to clean normally soiled cotton laundry declared to be washable at 40°C - 60°C. This programme reflects the efficiency stated on the energy label.

Hand Wash/Delicate
This programme is designed specifically for items of clothing that are recommended to be hand washed or for delicate laundry, washing at a temperature of 30°C.

Fast 60’ 60°C
A superb washing performance is possible for your cotton clothes in a very short time, only 60 minutes! Washing at 30°/ 40°/ 50°/ 60°C.

Rapid 15 min
The shortest programme ever! It is ideal for clothes “worn once”, which you need in a hurry, just 15 minutes. Washing at 30°C.

Spin/Drain
Additional spin step to any type of laundry after the washing cycle

Jeans
This programme is desinged to wash black and dark items made of cotton, mixed fibre or jeans at a temperature of 30°C.

Cotton
This programme is used for very dirty cotton and flax fabric at the following optional temperatures 40°/ 60°/ 70°/ 80° / 90°C

Cotton Prewash
Recommended as an additional washing process for heavily soiled laundry, at 30°/ 40°/ 50°/ 60°C

Wool
This programme is designed for woolen laundries with machine wash labels, washing them at 30°C.

Duvet
This programme is for washing a fibre duvet with a machine washable label (max. 2.5 kg) at a temperature of 40°/ 30°C.

Mix
This programme allows you to wash cotton, synthetics, colours and flax fabric together at a temperature of 30°/ 40°C.

Rinse
Additional rinse can be added to any type of laundry after the washing cycle.

Cotton 20°C
This programme is ideal for washing slightly dirty clothes with 20°C water.

Colours
This programme is designed for coloured fabrics or lightly soiled cotton and linen fabrics, it washes at 40°/ 30°C.

Outdoor / Sportsware
This programme is for very dirty or synthetic-mixed fabrics, washed at 40°/ 30°C.

- 10KG Washing Machine
- 15 Programmes
- 1400 Max Spin Speed
- Electronic Control System
- Anti Bacterial Coating
- Time Remaining LED Display
- Temperature & Spin Adjustment
- White
- D Energy Rating
- 3 Year Warranty

WMT14101WH

- 9KG Washing Machine
- 15 Programmes
- 1400 Max Spin Speed
- BDLC Motor
- Anti Bacterial Coating
- Time Remaining LED Display
- Temperature & Spin Adjustment
- White
- B Energy Rating
- 3 Year Warranty

WMT1491WH

- 8KG Washing Machine
- 15 Programmes
- 1400 Max Spin Speed
- Electronic Control System
- 15 Minute Quick Wash
- Time Remaining LED Display
- Temperature & Spin Adjustment
- Dark Inox
- D Energy Rating
- 3 Year Warranty

WMT1481DIX

- 8KG Washing Machine
- 15 Programmes
- 1200 Max Spin Speed
- Electronic Control System
- 15 Minute Quick Wash
- Time Remaining LED Display
- Temperature & Spin Adjustment
- White
- D Energy Rating
- 3 Year Warranty

WMT1281WH

- 7KG Washing Machine
- 15 Programmes
- 1200 Max Spin Speed
- Electronic Control System
- 15 Minute Quick Wash
- LED Display
- Temperature & Spin Adjustment
- Silver
- D Energy Rating
- 3 Year Warranty

WMT1271SL

- 7KG Washing Machine
- 15 Programmes
- 1200 Max Spin Speed
- Electronic Control System
- 15 Minute Quick Wash
- LED Display
- Temperature & Spin Adjustment
- Black
- D Energy Rating
- 3 Year Warranty

WMT1271BL

- 7KG Washing Machine
- 15 Programmes
- 1200 Max Spin Speed
- Electronic Control System
- 15 Minute Quick Wash
- LED Display
- Temperature & Spin Adjustment
- White
- D Energy Rating
- 3 Year Warranty

WMT1271WH

- 6KG Washing Machine
- 15 Programmes
- 1200 Max Spin Speed
- Electronic Control System
- 15 Minute Quick Wash
- LED Display
- Temperature & Spin Adjustment
- White
- D Energy Rating
- 3 Year Warranty

WMT1260WH

- 5KG Washing Machine
- 15 Programmes
- 1000 Max Spin Speed
- Electronic Control System
- 15 Minute Quick Wash
- LED Display
- Temperature & Spin Adjustment
- White
- D Energy Rating
- 3 Year Warranty

WM1004WH

- 8KG Integrated Washing Machine
- 15 Programmes
- 1200 Max Spin Speed
- 15 Minute Quick Wash
- Electronic Control System
- LED Display
- Child Lock
- D Energy Rating
- 3 Year Warranty

WMI1280WH

Image shows TDC90WH

- 9kg Condenser Dryer
- 15 Programmes
- Dry Finishing Options
- Sensor Drying
- Anti-Crease Drying
- 3-6-9 Hour Start Delay
- Internal Drum Light
- B Energy Rating
- White
- 3 Year Warranty

TDC90WH

- 8kg Condenser Dryer
- 15 Programmes
- Dry Finishing Options
- Sensor Drying
- Anti-Crease Drying
- 3-6-9 Hour Start Delay
- Internal Drum Light
- B Energy Rating
- Dark Inox
- 3 Year Warranty

TDC80DIX

- 7kg Condenser Dryer
- 15 Programmes
- Dry Finishing Options
- Sensor Drying
- Anti-Crease Drying
- 3-6-9 Hour Start Delay
- Internal Drum Light
- B Energy Rating
- Dark Inox
- 3 Year Warranty

TDC72WH

- Freestanding Washer Dryer
- 7kg Wash Capacity
- 5kg Dry Capacity
- 15 Programmes
- 1400 Max Spin Speed
- 33 Min Wash & Dry
- Child Lock
- 1-23 Hour Start Delay
- E Energy Rating (Wash & Dry)
- 3 Year Warranty

WD14752WH

- Freestanding Washer Dryer
- 7kg Wash Capacity
- 5kg Dry Capacity
- 15 Programmes
- 1400 Max Spin Speed
- 33 Min Wash & Dry
- Child Lock
- 1-23 Hour Start Delay
- E Energy Rating (Wash & Dry)
- 3 Year Warranty

WD14752SL

- Integrated Washer Dryer
- 8kg Wash Capacity
- 6kg Dry Capacity
- 16 Programmes
- Max Spin Speed 1400 rpm
- 1 Hour Wash & Dry
- Child Lock
- 24 Hour Start Delay
- E Energy Rating (Wash & Dry)
- 3 Year Warranty

WDI861WH

Image shows WD14752SL

- 60cm Freestanding Dishwasher
- 7 Programmes
- 12 Place Settings
- 12 Litre Water Consumption
- Adjustable Top Basket
- Overflow & Leakage Protection
- 49 dBa Max Noise Level
- E Energy Rating
- Dark Inox
- 3 Year Warranty

DW67DIX

- 60cm Freestanding Dishwasher
- 7 Programmes
- 12 Place Settings
- 12 Litre Water Consumption
- Adjustable Top Basket
- Overflow & Leakage Protection
- 49 dBa Max Noise Level
- E Energy Rating
- Stainless Steel
- 3 Year Warranty

DW67IX

- 60cm Freestanding Dishwasher
- 7 Programmes
- 12 Place Settings
- 12 Litre Water Consumption
- Adjustable Top Basket
- Overflow & Leakage Protection
- 49 dBa Max Noise Level
- E Energy Rating
- Black
- 3 Year Warranty

DW67BL

- 60cm Freestanding Dishwasher
- 7 Programmes
- 12 Place Settings
- 12 Litre Water Consumption
- Adjustable Top Basket
- Overflow & Leakage Protection
- 49 dBa Max Noise Level
- E Energy Rating
- Silver
- 3 Year Warranty

DW67SL

- 60cm Freestanding Dishwasher
- 4 Programmes
- 12 Place Settings
- 12 Litre Water Consumption
- Adjustable Top Basket
- Overflow & Leakage Protection
- 49 dBa Max Noise Level
- E Energy Rating
- White
- 3 Year Warranty

DW642WH

- 45cm Freestanding Dishwasher
- 4 Programmes
- 10 Place Settings
- 11 Litre Water Consumption
- Adjustable Top Basket
- Overflow & Leakage Protection
- 49 dBa Max Noise Level
- E Energy Rating
- White
- 3 Year Warranty

DW49WH

- 60cm Integrated Dishwasher
- 8 Programmes (3 Auto)
- 15 Place Settings
- 12 Litre Water Consumption
- 3-6-9 Hour Start Delay
- Adjustable Top Basket
- Info Light
- 45 dBa Max Noise Level
- E Energy Rating
- 3 Year Warranty

DFSN66

- Semi-Integrated Dishwasher
- 4 Programmes
- 12 Place Settings
- 12 Litre Water Consumption
- 3-6-9 Hour Start Delay
- Adjustable Top Basket
- Overflow & Leakage Protection
- 49 dBa Max Noise Level
- E Energy Rating
- 3 Year Warranty

DSSN63IX

- 60cm Integrated Dishwasher
- 4 Programmes
- 12 Place Settings
- 12 Litre Water Consumption
- 3-6-9 Hour Start Delay
- Adjustable Top Basket
- Overflow & Leakage Protection
- 49 dBa Max Noise Level
- E Energy Rating
- 3 Year Warranty

DF63

- 45cm Integrated Dishwasher
- 3 Programmes
- 10 Place Settings
- 12 Litre Water Consumption
- 3-6-9 Hour Start Delay
- Adjustable Top Basket
- Overflow & Leakage Protection
- 49 dBa Max Noise Level
- E Energy Rating
- 3 Year Warranty

DF452

Overflow & Leakage Protection
Protects against overflow and deactivates the dishwasher if a leak is detected beneath the machine.

Delay Timer
The start time of a program can be delayed, from 1 to 24 hours.

Quick Clean
A quick clean programme, varying in time, depending on the model, from 15 mins to 50 mins.

Child Lock
The buttons on the control panel can be locked, to prevent curious hands from activating the dishwasher.

Hygiene Wash
A dedicated programme which increases water temperature at final rinse to help eliminate bacteria.

Turbo Drying
A fast drying function to aid dish drying at the end of the wash cycle.

Half Load
Reduce energy and water usage by activating either the top or bottom basket for half loads.

3rd Shelf
A 3rd shelf at the top of the dishwasher for cutlery allows for added space on the bottom shelf.

Oven Dimensions

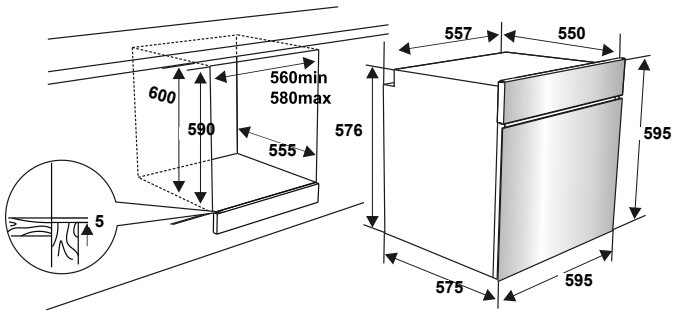

SO106IX/BL, SO206IX/BL, SOC315BL, SOP316IX, SOP415IX, SOC525IX, SOP525IX

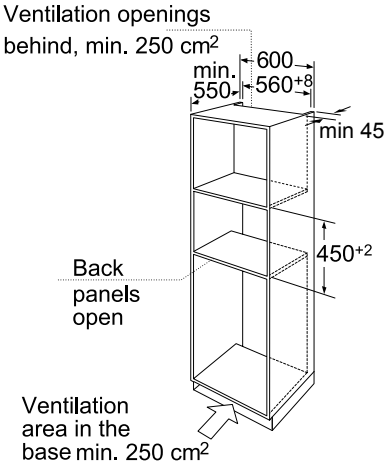

NM525IX

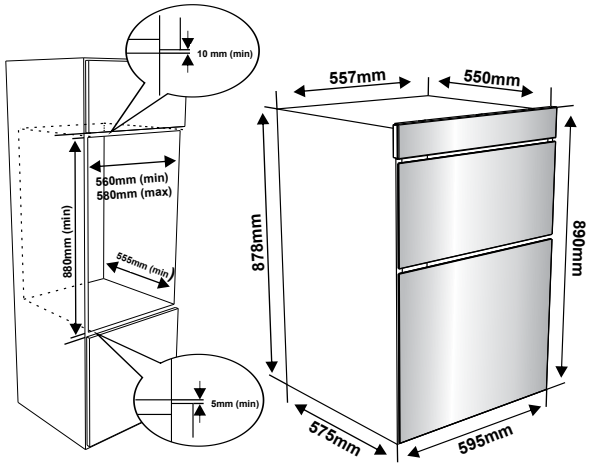

DOIC425IX, DOI325IX

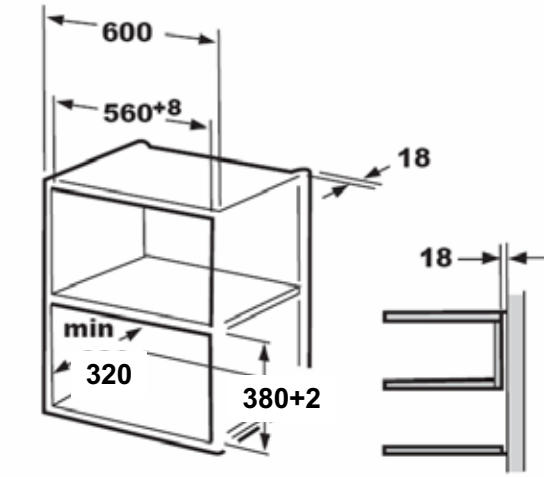

NM824BBL, NM25IX

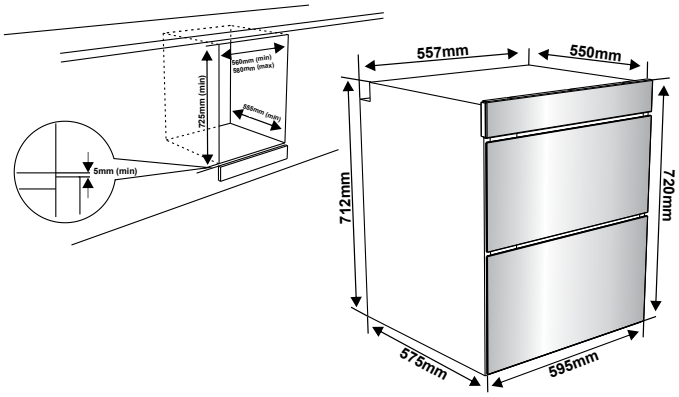

DOUC425IX

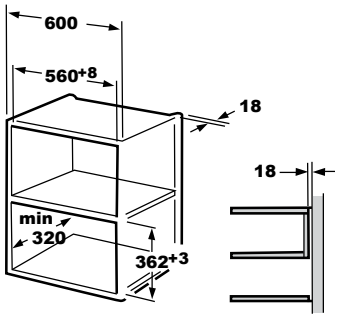

NM825BIX

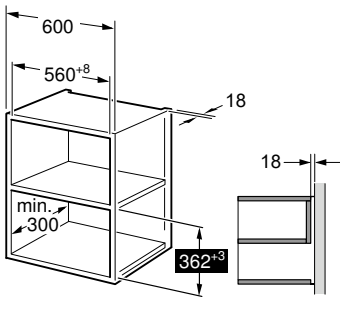

NM20IX

Hob Dimensions

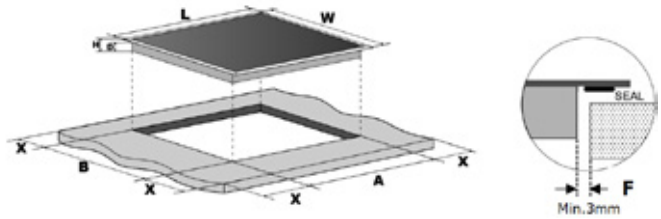

L(mm)	W(mm)	H(mm)	D(mm)	A(mm)	B(mm)	X(mm)	F(mm)
900	520	60	56	870+4	490+4	50 min	3min

HCI901FL

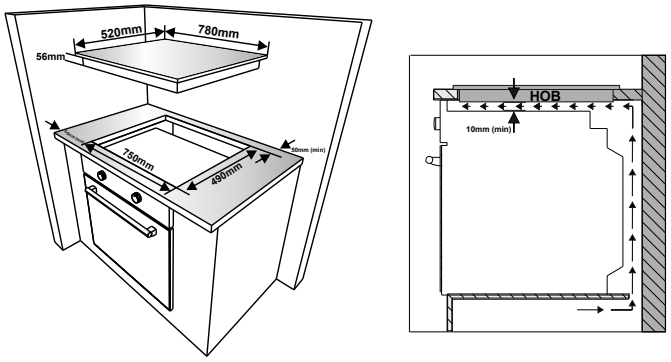

HCI781FL

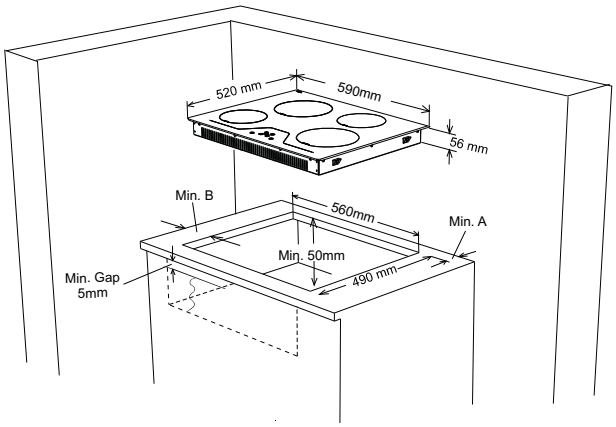

Neighbourhood walls	A [mm]	B [mm]
Wood	40	40
Concrete or ceramic tiled	25	25

HCI62FL

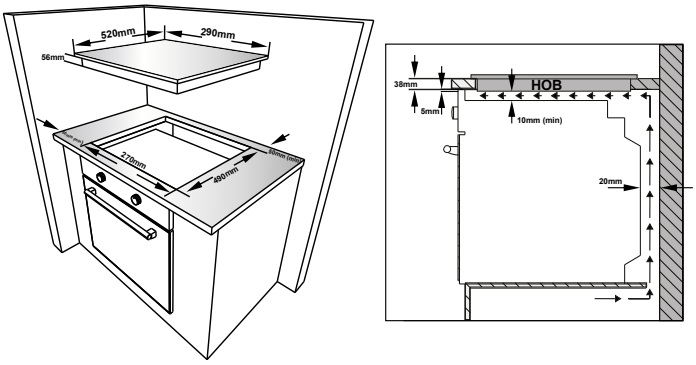

HCI30FL, HTC30

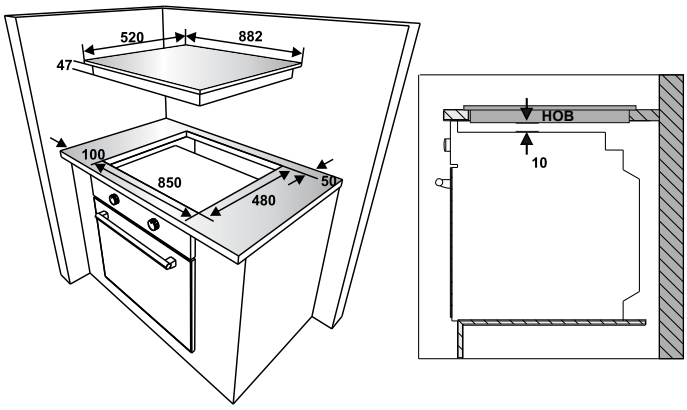

HGX903BGL

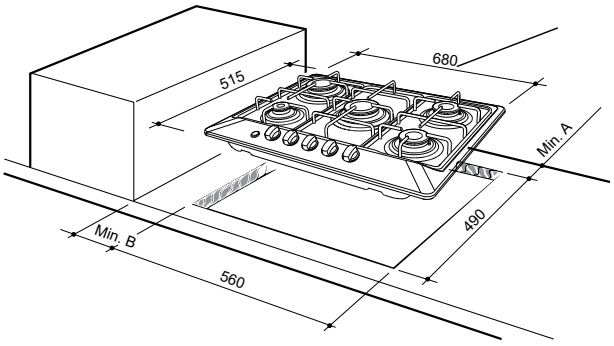

HGX703BGL, HGX703IX

Hob Dimensions

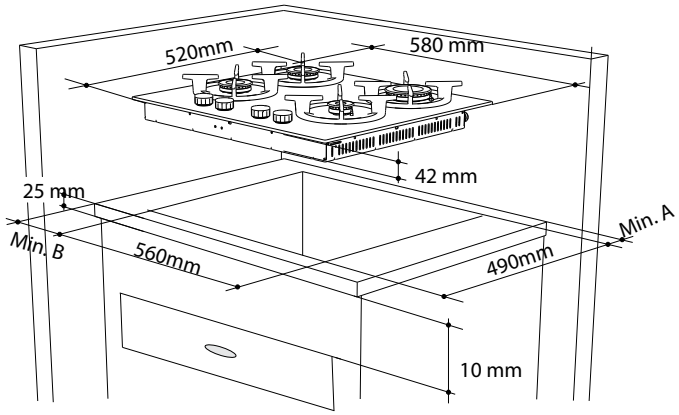

HGX603BGL, HGX603IX

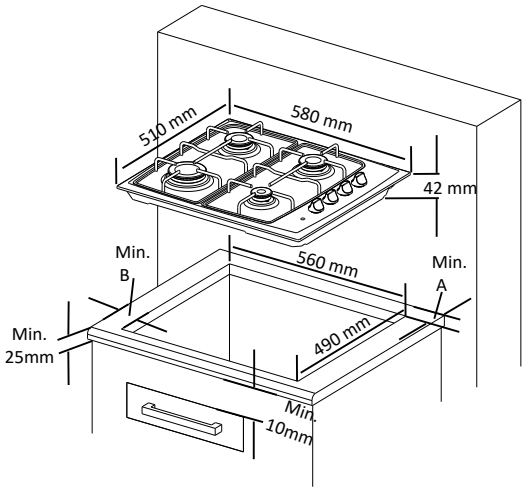

HGE603BGL, HGE603IX

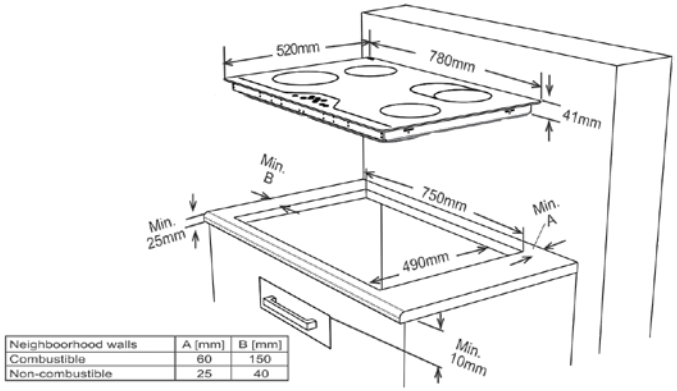

Neighboorhood walls	A [mm]	B [mm]
Combustible	60	150
Non-combustible	25	40

HCT781FL

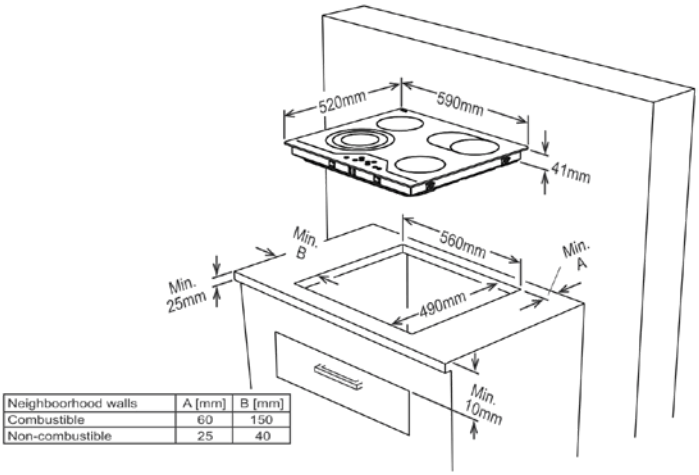

Neighboorhood walls	A [mm]	B [mm]
Combustible	60	150
Non-combustible	25	40

HCT62FL

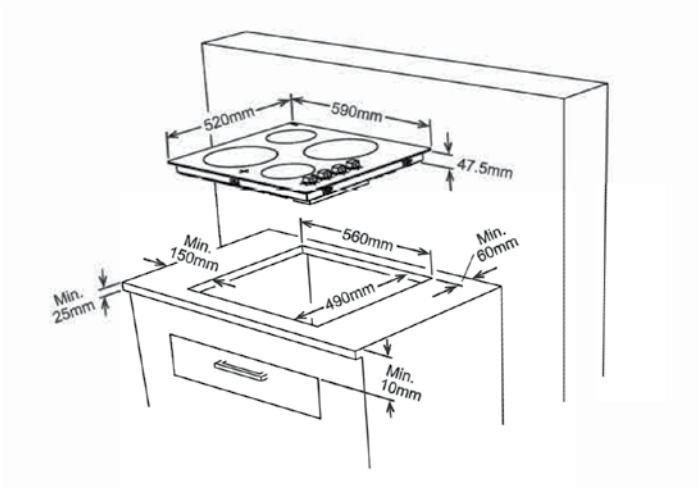

HCP604FL

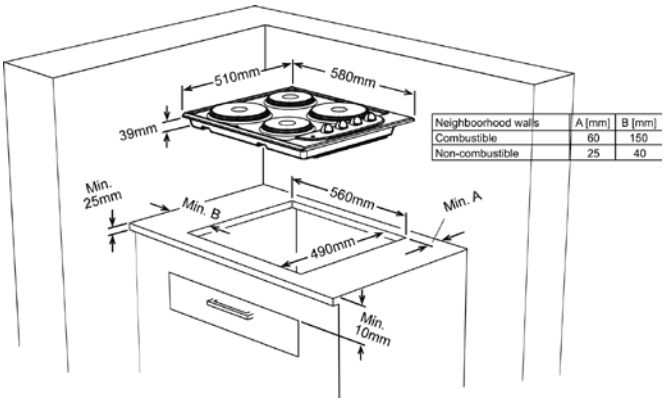

Neighboorhood walls	A [mm]	B [mm]
Combustible	60	150
Non-combustible	25	40

HE62IX, HE62BL

Hood Dimensions

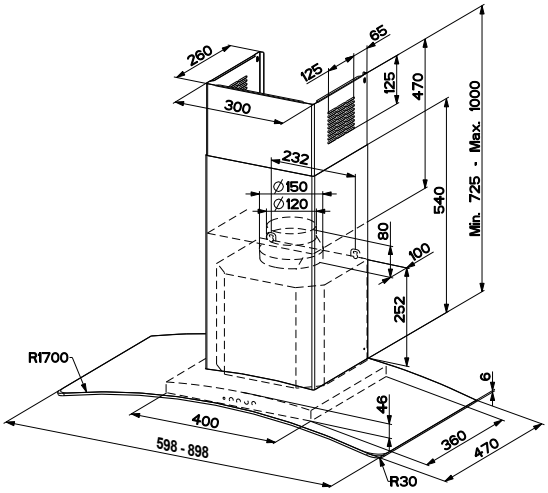

CHGLS905IX, CHGLS605IX

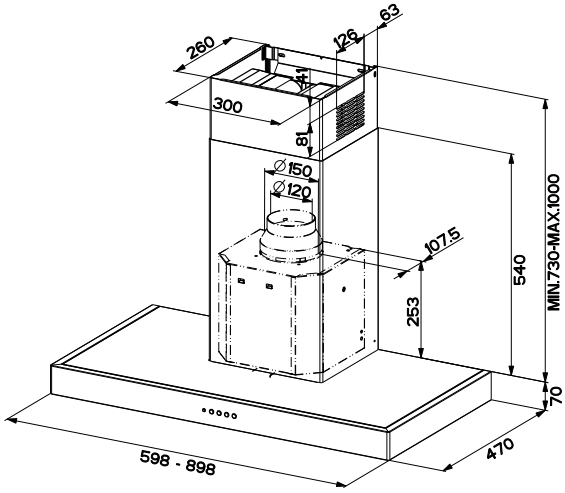

CHBD904IX, CHBD604IX

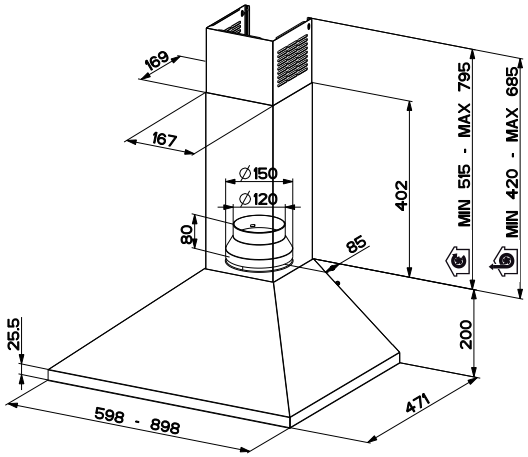

CHCMY604IX

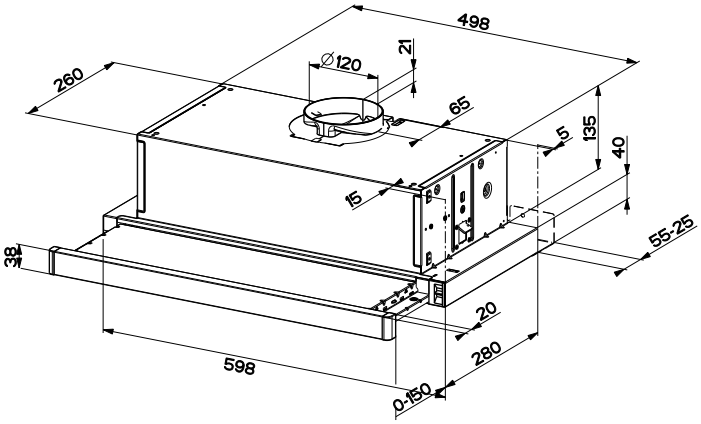

CHTEL60

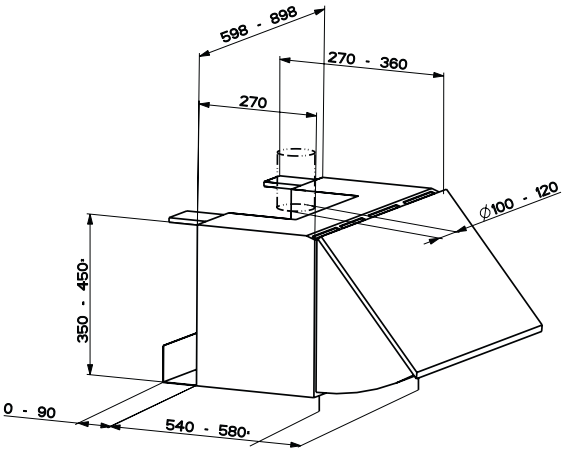

CHINTTWIN60, CHINTSINGLE60

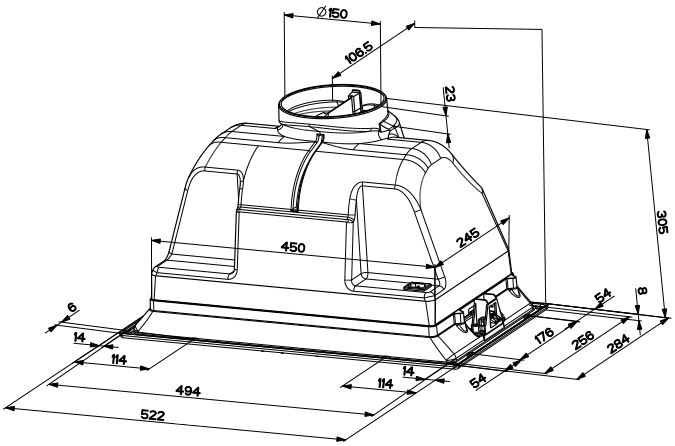

CHCANSINGLE60

Integrated Cooling Dimensions

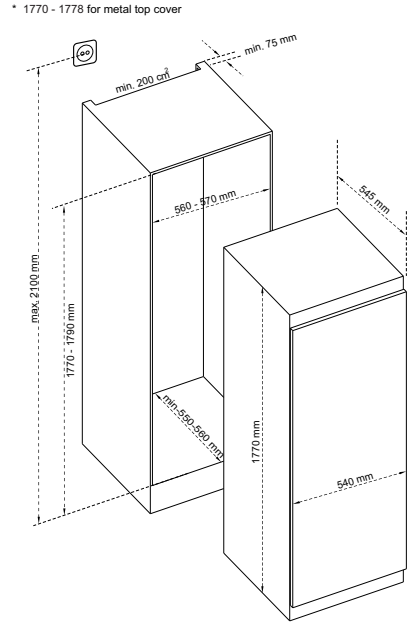

RITL398, RITF394ANF

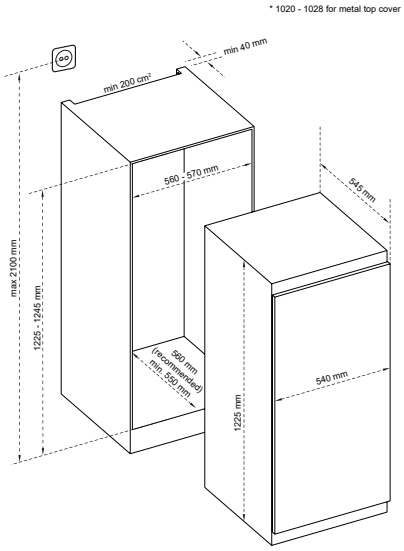

RII1233, RIL1233

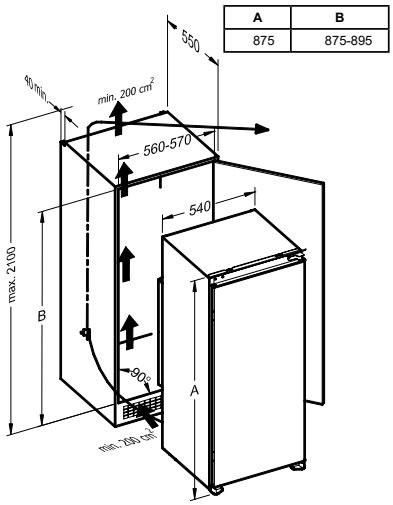

RII880A+

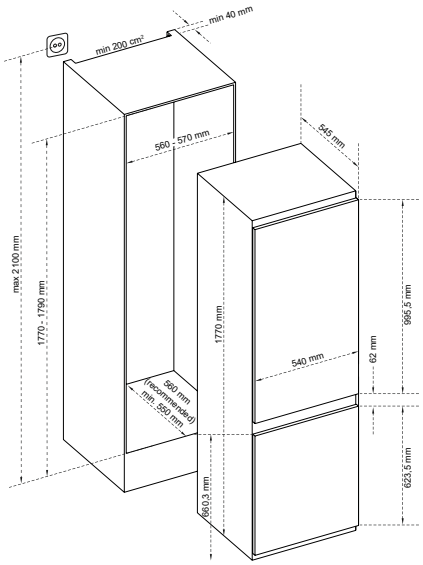

RIFF70303NF, RIFF70303NM

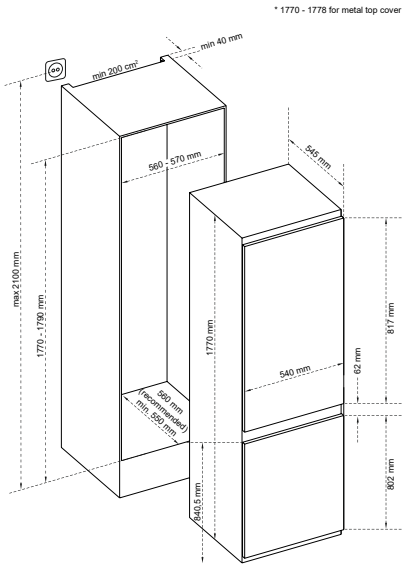

RIFF50503NF, RIFF50504NM

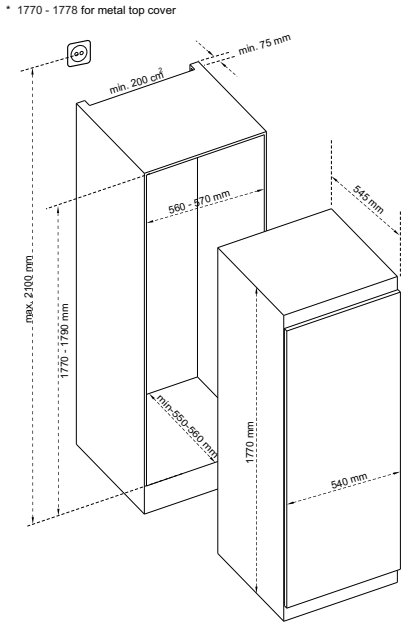

RITL398

Integrated Cooling Dimensions

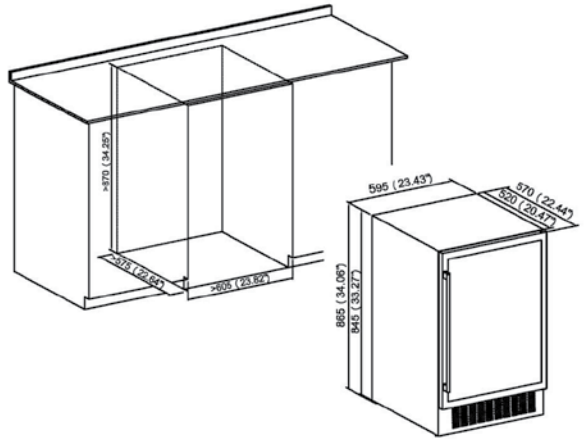

WC46IX

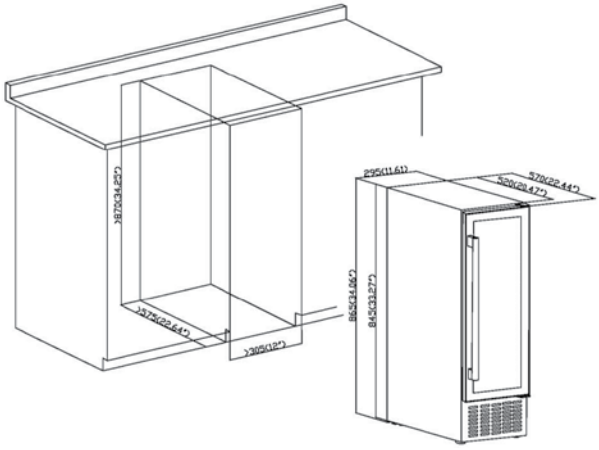

WC17IX

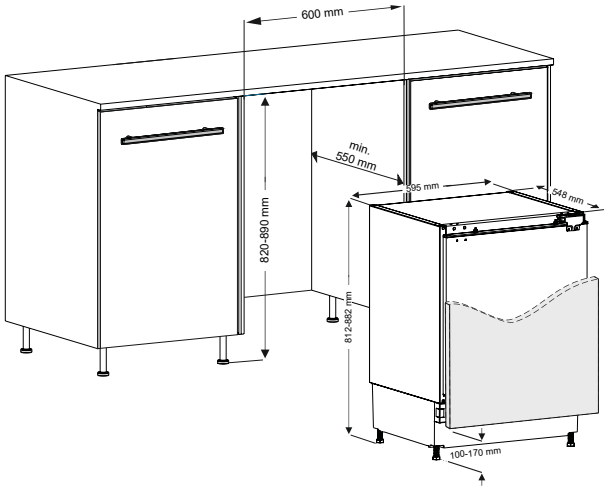

RIUL142INM, RIUF102NM

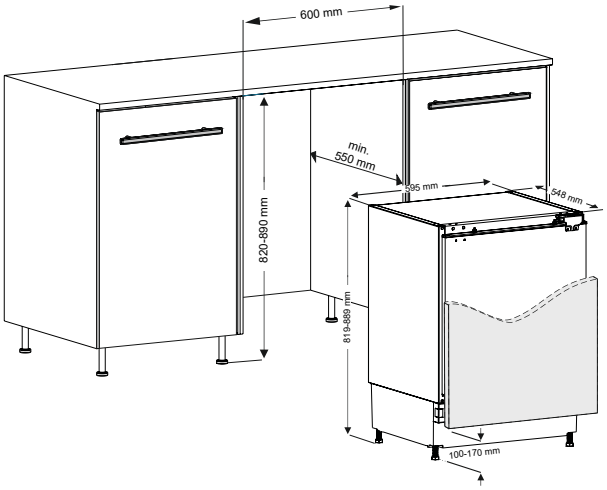

RIUI161NMA+

Integrated Laundry & Dishwasher Dimensions

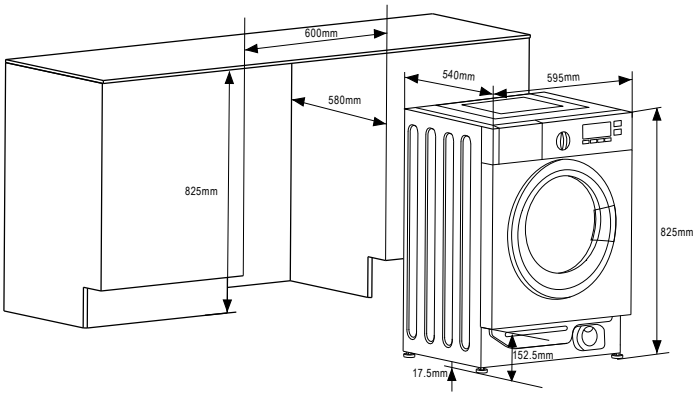

WMI1470WH, WDI861WH

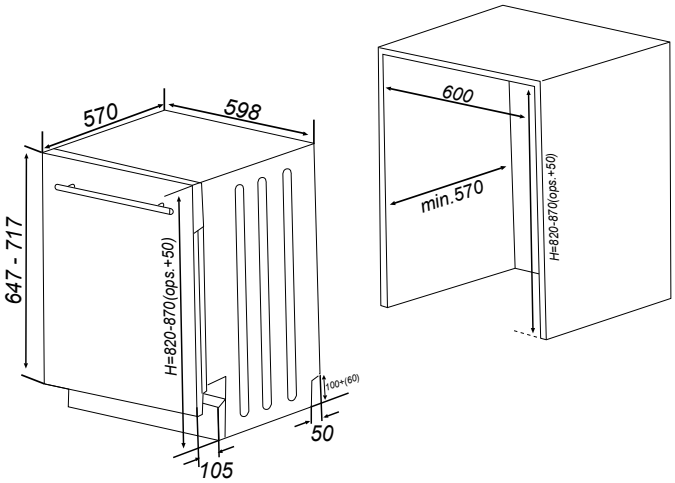

DFSN66, DF63

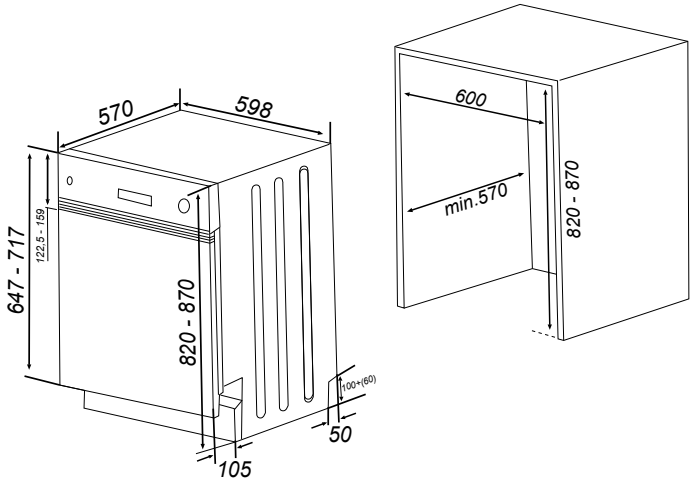

DSSN63IX

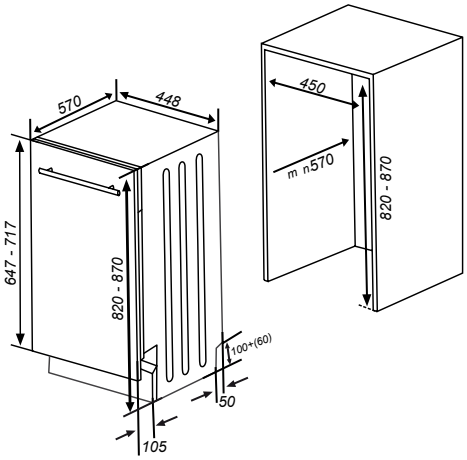

DF452

Warming Drawer Dimensions

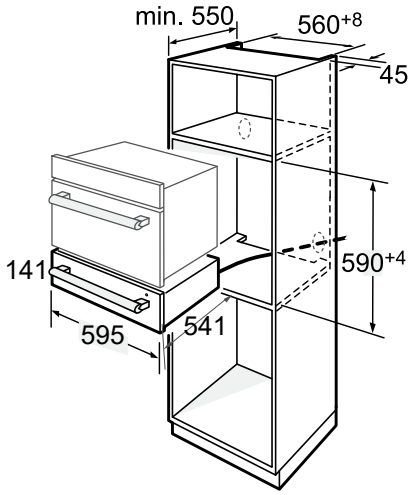

WD525IX

Customer Service

That puts you first every time.

All NordMende appliances are built to last, harnessing the very best of technology.
And with a 3 Year Parts & Labour warranty on nearly all the appliances featured in this brochure*
you can look forward to a trouble-free life with NordMende.

At NordMende, the quality of our after-sales service is just as important to us as the quality of our products. Naturally, if you choose an appliance supplied by us you will be able to rely upon your appliance to provide you with many years of loyal service and devotion to duty. However, in the event of a problem, you can feel secure in the knowledge that our experienced repair team are dedicated to ensuring an outstanding after sales service for you.

Our after-sales service team are committed to developing an outstanding customer journey experience for you and whatever your preference, we will keep you updated via telephone calls, email or text regarding your products' repair journey.
For ROI customers, we are based right here in the Republic of Ireland with a network of engineers nationwide at your convenience.
For NI & GB customers, we have local networks of engineers available at your convenience

*Register To Receive Your Free 3 Year Warranty

All NordMende household appliances are fully guaranteed for 2 years from the date of purchase. If you register online or with our customer service team within 30 days of purchase you will receive an additional 1 year free - so *3 years in total*.

Your warranty covers major parts only and excludes microwaves which carry a 1 year parts and labour warranty.

Please retain your original proof of purchase to secure your warranty guarantee.

3 YEAR WARRANTY

How To Register?
For ROI please register online at **www.nordmende.ie/warranty-registration**

For NI & GB please register at **www.nordmende.co/warranty-registration**

Before registering, please have the following information:

1. Serial number
2. Date of purchase
3. Place of purchase
4. Your full name, address and contact telephone number

Aftersales Service
For ROI please contact us online at **www.nordmende.ie/contact** or call our advisors on **01 4136400.**

For NI & UK please contact us online at **www.nordmende.co/contact** or call our advisors on **028 9023 5088** (NI) or **0845 600 3310** (GB)

Before contacting us please have the following information:

1. Serial number
2. The phone number the product was registered against
3. Fault details

NordMende Warranty Conditions:

- The Guarantee covers the appliance for use in a normal domestic environment. Institutional or commercial use is not covered.
- The appliance has been correctly installed and used only on the electricity or gas supply stated on the appliance rating plate.
- All Gas appliances must by law be fitted by a Registered Gas Installer
- The appliance has been used in accordance with the manufacturers operating and maintenance guidelines.
- The appliance has not been serviced or tampered with by an unauthorised service engineer.
- Registration can only be confirmed by entering the products valid serial number.- see our website for instructions on where on your appliance you can locate the serial number.

Your NordMende Warranty Does Not Cover:

- Damage or as a result of transportation, improper use or neglect.
- Complaints due to the use of incorrect voltage.
- Failure of the water supply.
- Failure of the electricity supply.
- Failure to operate the appliance in line with the guidelines set out in the instruction manual.
- Replacement of consumable items. E.g. Fuses, bulbs, broken glass, knobs
- Replacement of any cosmetic parts including ceramic hob glass and all appliance doors.
- Replacement of any accessories such as oven trays.
- Any service calls as a result of lack of maintenance of the appliance, e.g. filter blockages, drainage systems, soap dispensers etc.
- Appliances found to be used in a commercial environment

NORDMENDE

SMART LIVING

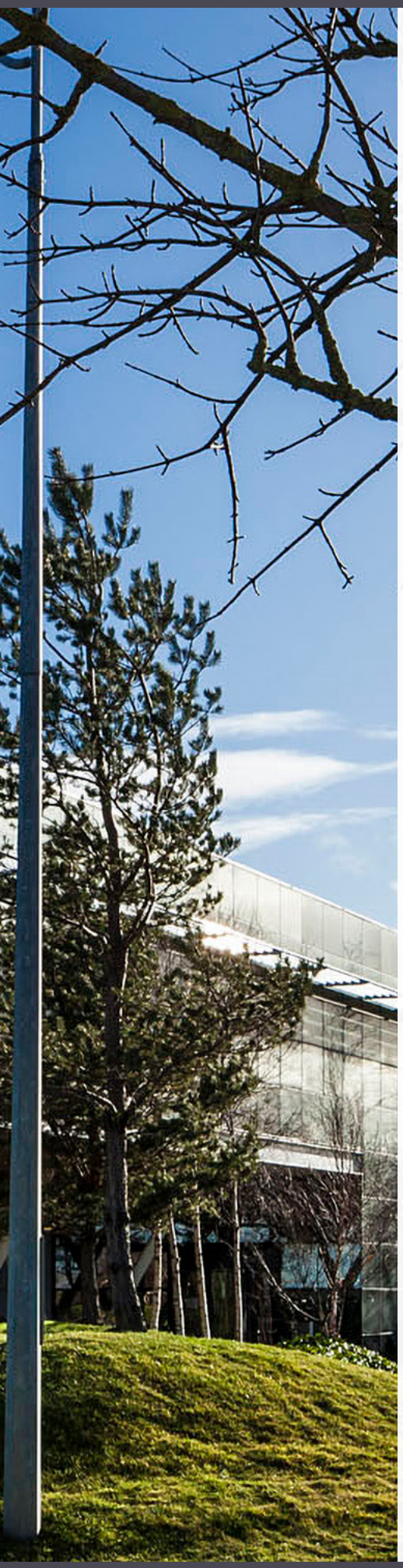

The Home of NordMende

Come visit the KAL showrooms, based in Citywest Business Campus. This state-of-the-art showroom (recently renovated) is Ireland's largest showroom for quality home appliances and the home of NordMende in Ireland. Showcasing the full range of NordMende appliances, along with many other quality home appliance brands.

KAL is Ireland's leading distributor of globally recognised kitchen and domestic appliance brands. They are the exclusive Irish distributor of NordMende, De Dietrich, Elica, Franke, Shark and Ninja amongst others.

Book an appointment, either online or in person, with one of KAL's highly trained advisors and you will receive a bespoke, one-on-one service to help you find the right appliances for your kitchen.

Visit **www.kal.ie/one-to-one** to book your appointment.

Contact details ROI:

Kitchen Accessories Ltd
4078 Kingswood Road
Citywest Business Campus
Dublin 24
D24 EYV1

(01) 413 6400
showroom@kal.ie
www.kal.ie
sales: kal-orders@kal.ie
service: kalscl@kal.ie
spares: kalspares@kal.ie

KAL Advisory Centre

www.nordmende.ie

Contact details NI & GB:

A.B. Distributors
2 Cromac Place,
Belfast,
BT7 2JB
United Kingdom

NI: (028) 9023 5088
GB: (0845) 600 3310
mail@abdistributors.co.uk
www.abdistributors.co.uk

www.nordmende.co

abdistributors

KAL

A member of the
Gowan Group